Toilet close-coupled # 2155090000 |< 370 mm >|

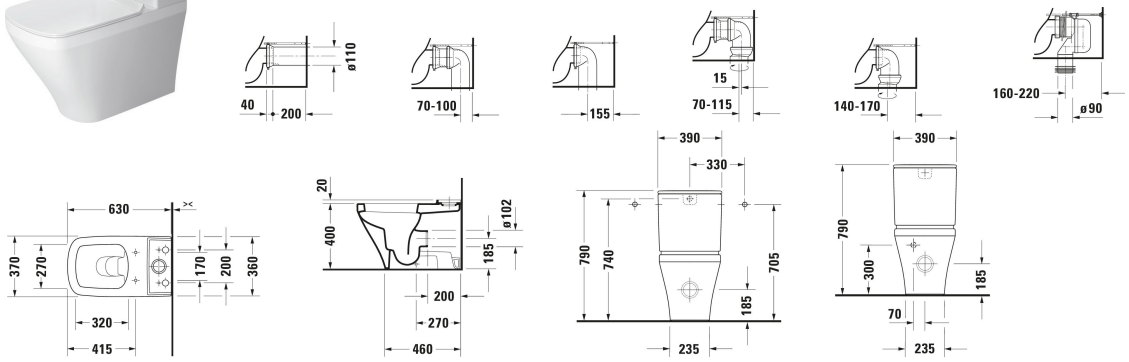

Toilet close-coupled	Dimension	Weight	Order number
Washdown model, Flushing rim: Closed, Outlet drain: horizontal, Position outlet: Back, Incl. cistern: No, Flush principle: ousting, For bowl mounted cistern, Length adjustable, Incl. mounting material, Unified Water Label (UWL) Class: 1			
Colors			
00 White High Gloss			
Variant			
White High Gloss, Flush water quantity: 4,5 l, Outlet dimensions for Vario connecting bend vertical: 160 mm - 220 mm, Outlet dimensions for Vario outlet set vertical/horizontal: 70 mm - 170 mm	370x630 mm	30.500 kg	2155090000
Accessory			
Connector Set Outlet drains	397 x 397 mm	1.29 kg	001422
Vario connecting bend Diamter of inlet: 75 mm, Diameter drain: 90 mm	400 x 360 mm	0.73 kg	899025
Suitable products			
Toilet seat Soft-closing: No, Hinge material: Stainless steel, 359 x 423 mm	359 x 423 mm		006371
Toilet seat Soft-closing: Yes, Removable Seat, Hinge material: Stainless steel, 359 x 433 mm	359 x 433 mm		006379
Toilet seat Vital Soft-closing: No, Hinge material: Stainless steel, 377 x 447 mm	377 x 447 mm		002061
Cistern Dual Flush, Water connection position: Bottom left, Flush operation position: Top, Surface of push button: Chrome, Concealed connection, Unified Water Label (UWL) Class: 2, 390 x 170 mm	390 x 170 mm		093515

Toilet close-coupled # 2155090000 |< 370 mm >|

All drawings contain the necessary measurements which are subject to standard tolerances. They are stated in mm and are non-binding. Exact measurements, in particular for customised installation scenarios, can only be taken from the finished piece.